NEW

GMB AVAILABLE NOW

17 APR. 2019

NEW ITEMS

■ UNIVERSAL JOINT

TOYOTA

PART NO.	APPLICATION GUIDE			
GUT-23MSR 04371-0K110 INTERNAL CIRCLIP TYPE(INSIDE SNAP)	2GDFTV 2400	HILUX GUN125 (17.08-) SNAP RING (DIA.26.5 x T=1.4)	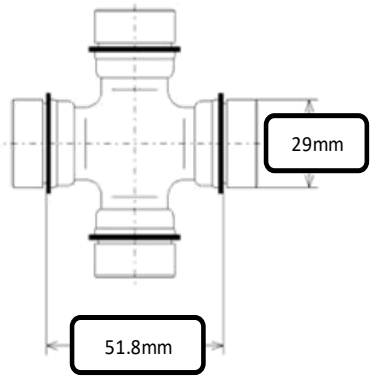	

Additional information on genuine part numbers

TOYOTA

OEM# 04371-0K120 = GUT-20